PROJECTA

INTELLI-CHARGE
DC/SOLAR BATTERY CHARGER
LINBUS, MULTI-CHEMISTRY

WARNING: This is a HIGH current device.
It is the installer's responsibility to ensure all cabling meets the requirements as stipulated on page 6 of this installation manual to ensure a SAFE installation, particularly when upgrading with a higher capacity unit. Failure to comply with the supplied installation instructions will void the warranty.

P/No. IDC25X,
IDC50X

CAUTION: Surface may become hot during operation. Avoid direct contact to prevent burns.

IMPORTANT SAFETY INFORMATION

Please read this manual thoroughly before use and store in a safe place for future reference.

WARNINGS

- Explosive gases may escape from the battery during charging. Prevent flames and sparks and provide adequate ventilation.
- Before charging, read the instructions.
- FOR CHARGING 12 VOLT AUTOMOTIVE BATTERIES ONLY.
- Do not attempt to charge non-rechargeable batteries.
- Never charge a frozen battery.
- Corrosive substances may escape from the battery during charging and damage delicate surfaces. Store and charge in a suitable area.
- This appliance is not intended for use by young children or infirm persons unless they have been adequately supervised by a responsible person to ensure that they can use the appliance safely.
- Young children should be supervised to ensure that they do not play with the appliance.
- Fit fuses as close to the batteries as possible to protect the cable in case of short circuit P/n: FK25A for IDC25X and P/n. FK50A for IDC50X.
- Do not use power tools to tighten ring terminals for ALT, Solar, Neg, and Aux wires

FEATURES

The IDCX charger is Intelli-Charge's next generation in DC-DC charging. It has been designed with next generation technology to ensure your DC-DC charging experience is unrivalled. The IDCX features everything needed to maintain the auxiliary battery to its optimum condition and to prolong battery life.

- **DUAL INPUT OPERATION**
  The IDCX allows for simultaneous dual battery charging from both solar and alternator inputs with no manual switching required. The unit prioritises solar charging as its default and automatically adjusts to the alternator if sunlight is insufficient, reducing the power usage placed on the vehicle's electrical system.

- **TOUGH & RELIABLE**
  IDCX is rated to IP68 & IP69K, ensuring it can withstand the toughest of conditions.
  All connections into the IDCX are done via brass posts and crimped terminals. Ideal for mounting in the engine bay. IDCX use temperature compensation to ensure the battery receives the correct charge voltage regardless of ambient temperatures. It reduces the voltage in warmer climates to ensure the battery does not boil.

- **SMART DC-DC CHARGING**
  IDCX paired with Intelli-IQ supports advanced control of the dual battery system including Bluetooth connectivity to an iOS or Android device. Note Intelli-IQ is sold separately.

- **MULTI-CHEMISTRY CHARGING**
  The IDCX charger supports a variety of battery types, including standard automotive batteries and newer lithium-based batteries. For automotive batteries, it offers tailored charging profiles for AGM, GEL, WET, Calcium, and LiFePO4 chemistries. Users should ensure compatibility with non-automotive lithium batteries by checking the battery's datasheet to confirm that the IDCX's charging profile is suitable before connecting.

- **ADAPTIVE CHARGING**
  This feature helps protect your starter battery by automatically adjusting the charging current when your car's engine stops, ensuring the battery is not overstressed during idle periods
- **PARALLEL CHARGING**
  IDCX can be wired in parallel to provide more charging current for larger systems. This flexibility gives users the option to add another IDCX into their system should power requirements change. Note: Solar Input has to be connected to the Master IDCX. Else, LEDs will falsely indicate charging. To force an IDCX become the Master of the system, follow the steps below; (Regardles what the charging state is,)
  1. Disconnect all LIN wires on the IDCX except the one on the intended Master.
  2. On the IQD2 display (not App), go to settings.
  3. While on settings, scroll to the page where 'RESET' button is.
  4. Press 'RESET' button.
  5. Wait until IQD2 fully restarts and display shows the 'New Device Found' message.
  6. Press 'Continue'.
  7. Connect all other LIN wires.
  8. May need to wait for more than 1minute for all the IDCX units to be displayed in the App.
- **FUTURE PROOF**
  IDCX was designed to stand the test of time. When IDCX is paired with an Intelli-IQ, the firmware can be updated via Bluetooth ensuring IDCX software is always up to date with the latest features.
- **SOLAR MPPT**
  The IDCX utilises sophisticated MPPT (Maximum Power Point Tracking) solar regular technology. MPPT maximises the power generated from the solar panels to the auxiliary battery.
- **CHARGING VOLTAGE LOSS COMPENSATION**
  To compensate the voltage drop on the wire leading to the Auxiliary battery, the IDCX may increase its output voltage while charging. This ensures the charging voltage is at its optimum level.
- **PROTECTIVE FEATURES**
  The unit has a output capacitor inside, when a battery is connected to the AUX output, there will always be a small spark.
- **REVERSE CONNECTION PROTECTION**
  Reverse connection on input and output posts does not damage IDCX internal circuit. The IDCX detects reverse connection condition and indicates whether input or output connection is reversed.
- **OVER AND UNDER VOLTAGE PROTECTION**
  The charger will automatically shut down if there is an over voltage or under voltage problem.
- **OVER TEMPERATURE PROTECTION**
  The charger will lower its output current if the temperature of the unit begins to overheat.

SPECIFICATIONS

P/No.	IDC25X				IDC50X	
Operating Conditions						
Alternator Input Voltage	9-32V					
Maximum Solar Input Voltage	32Vdc					
Maximum Input Current	35A				70A	
Input Current (No Load)	8mA					
Output Current	INPUT: 9-11Vdc 20A INOUTL 11-32Vdc 25A				INPUT: 9-11Vdc 40A INOUTL 11-32Vdc 50A	
External LED Output – Constant Current	5mA					
Input Fuse Rating	50A (Not supplied) - FK25A Recommended				80A (Not supplied) - FK50A Recommended	
Output Fuse Rating	50A (Not supplied) - FK25A Recommended				80A (Not supplied) - FK50A Recommended	
Maximum Output Power	360W				720W	
Size (mm)	137 x 122 x 50				137 x 122 x 71	
Weight (g)	1180				1750	
Charge Control						
Charge Type	5 Stage					
Constant current up to	BULK* 20A at 9-11Vdc, 25A at 11-32Vdc				BULK* 40A at 9-11Vdc, 50A at 11-32Vdc	
	GEL 14.1V	AGM 14.4V	WET 14.7V	CALCIUM 14.7V	$LiFePo_4$ 14.2V	
Absorption	Constant voltage until current drop to 3.8A:					
	GEL 14.1V	AGM 14.4V	WET 14.7V	CALCIUM 14.7V	$LiFePo_4$ 14.2V	
Float	GEL 13.7V	AGM 13.7V	WET 13.7V	CALCIUM 13.7V	$LiFePo_4$ 13.5V	
Equalisation (Calcium Mode & Periodic Desulf)	2A Constant Current Charge up to 16V then hold for 30min (5 hour timeout)					
Battery Range						
Battery Capacity	Please check the battery user manual					
Type of Batteries Supported	GEL, AGM, WET, CALCIUM & $LiFePo_4$					
Operating Mode						
Vehicle Voltage Range	12Vdc				24Vdc	
VSR Mode - Default (Ignition Override not connected)	Turn On 13.4-16.5Vdc		Turn Off <11.9Vdc		Turn On 24.4-32.0Vdc	Turn Off <23.8Vdc
Low Voltage Mode - Ignition Over-ride cable connected to ignition switch (Ignition On)	Turn On 12.2-16.5Vdc		Turn Off <11.9Vdc		Turn On 24.4-32.0Vdc	Turn Off <23.8Vdc
Output Current	Input 9-11Vdc 20A Input 11-32Vdc 25A				Input 9-11Vdc 40A Input 11-32Vdc 50A	
Standards						
EMC	AS/NZS CISPR11 Class V, R10					
IP Rating	IP68 & IP69K					

PRODUCT OVERVIEW

IDCX

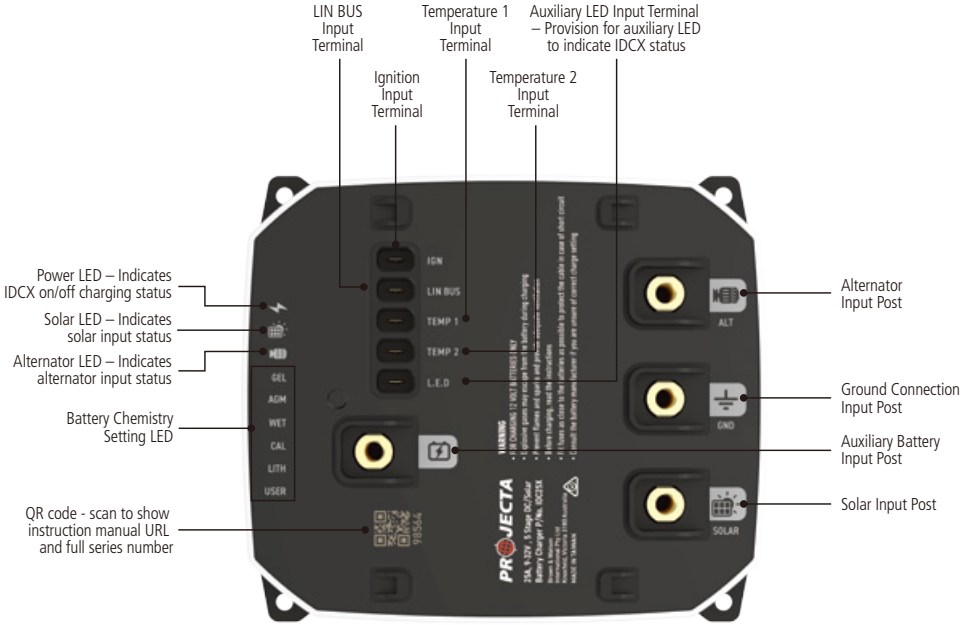

IDC25X

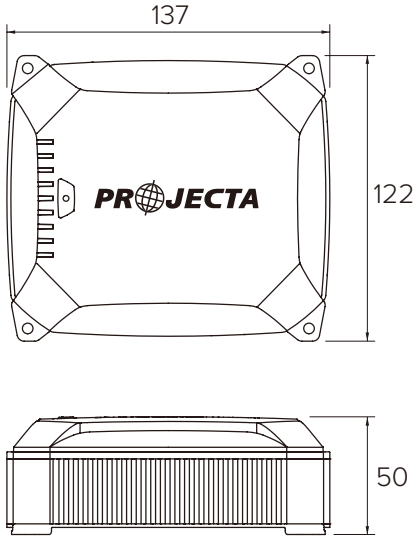

IDC50X

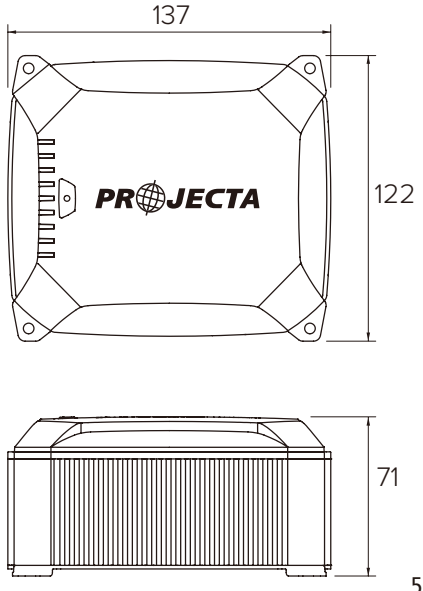

INSTALLATION

MOUNTING

IDCX's IP68 & IP69K tough & rugged design allows for the unit to be mounted where best suits the application. IDCX entire PCB is potted using a high-quality thermal compound inside the aluminium extrusion; this ensures IDCX is impervious to vibration, dust, moisture and extreme temperatures. Though tough, it is advisable however to keep the charger as far away from exhaust, turbos, or any other high temperature components to ensure improved performance.

WIRING

To make reliable and durable electrical connections, battery cables will need to be made to the correct length. Reducing the wires' or cables' lengths properly will help to avoid unexpected voltage drops and noise. Cable lugs should be crimped and insulated to the cable before connection to the brass posts and spade terminals.

Minimal cable size for wiring up to 12m:

Input Name	Recommended Cable Size	
Alternator Input Post	$8mm^2$ (8 B&S)	$13mm^2$ (6 B&S)
Solar Input Post	$8mm^2$ (8 B&S)	$13mm^2$ (6 B&S)
Auxiliary Output Post	$8mm^2$ (8 B&S)	$13mm^2$ (6 B&S)
Common Ground Output Post	$8mm^2$ (8 B&S)	$13mm^2$ (6 B&S)
Ignition Input Blade Terminal	$1.0 – 1.5mm^2$	
LIN BUS Input Blade Terminal	$1.0 – 1.5mm^2$	
Battery Temperature 1 Input Blade Terminal	$1.0 – 1.5mm^2$	
Battery Temperature 2 Input Blade Terminal	$1.0 – 1.5mm^2$	
Auxiliary LED Input Blade Terminal	$1.0 – 1.5mm^2$	

Please increase the cable size for cables beyond 12m length as required. Contact Technical Support for assistance on **1800 422 422**.

1. Disconnect the negative battery cable (Earth) from the vehicle's starting battery or disconnect power to the trailer. Note: To prevent the loss of vehicles electronic memories, radio pre-sets & security codes, it is recommended that an "Electrical System Memory Protector" be used.
2. Connect the Auxiliary Battery positive (+) terminal to the auxiliary battery output post. Fit at a fuse (50A for IDC25X, 80A for IDC50X) to the cable as close as possible to the Auxiliary Battery positive (+) terminal.
3. Connect the Auxiliary Battery (-) terminal to the IDCX common ground output post. Alternatively connect both Auxiliary battery negative (-) terminals and IDCX common ground output post to the vehicle's chassis ground. After the Auxiliary battery has been connected, check LED indicators. Do not proceed if either there is Output Overvoltage alarm (red LED) or the LEDs do not turn ON.
4. Connect the Starter Battery positive (+) terminal to the IDCX Alternator Input Post ( ). Fit a fuse (50A for IDC25X, 80A for IDC50X) to the cable as close as possible to the Starter Battery positive (+) terminal.

5. If your vehicle has a fixed voltage or temperature compensating alternator installed, do not make connection to the Ignition Input Blade Terminal.

   If your vehicle has a smart (variable voltage) alternator installed, the Ignition Input Blade Terminal must be connected to the vehicle's ignition. At 12.2V ALT voltage, the IDCX will only operate when the vehicle's ignition is turned on (may take up to 2 minutes to start charging). Fit a 1-2A fuse to the cable as close as possible to the vehicle's ignition.

   Consult the vehicles manufacturer for type of alternator installed in your vehicle.

6. To add 12Vdc solar panels to the system connect the solar panel positive terminal (+) to the IDCX solar input post ( ). Fit a fuse to the cable as close as possible to the Solar Panel positive (+) terminal (refer to the table below for fuse size).

   NOTE: No solar controller is required with the IDCX. If using portable solar panels that include a solar controller, the controller will need to be bypassed.

   After the positive has been connected, connect the solar panel negative (-) terminal to the ( ) vehicle chassis ground.

Solar Panel Size	Fuse Size
120W	15A
160W	15A
200W	20A
240W	30A
360W	50A

7. The LED output terminal provides about 5mA constant current output. It can power an LED panel mount indicator without an external resistor.

   This LED output terminal is not required to be wired into if you do not need an external LED indicator. If an external LED indicator is required, connect the positive (+) terminal of a LED Indicator to the LED input terminal (L.E.D).

   Connect the negative terminal of the LED indicator to the vehicle chassis ground.

8. The TEMP1 & TEMP2 input terminals are used to provide temperature compensated battery charging. Attach the provided temperature sensing loom blade terminals to TEMP1 & TEMP2 inputs on IDCX, the ports are dual polarity allowing the negative and positive to be plugged into either port. The temperature sensing loom is provided with 5m wire, please cut the excess length to minimize voltage drops and noise.

WIRING INSTRUCTION GUIDES

1. FULL SYSTEM WITH INTELLI-IQ CONFIGURATION

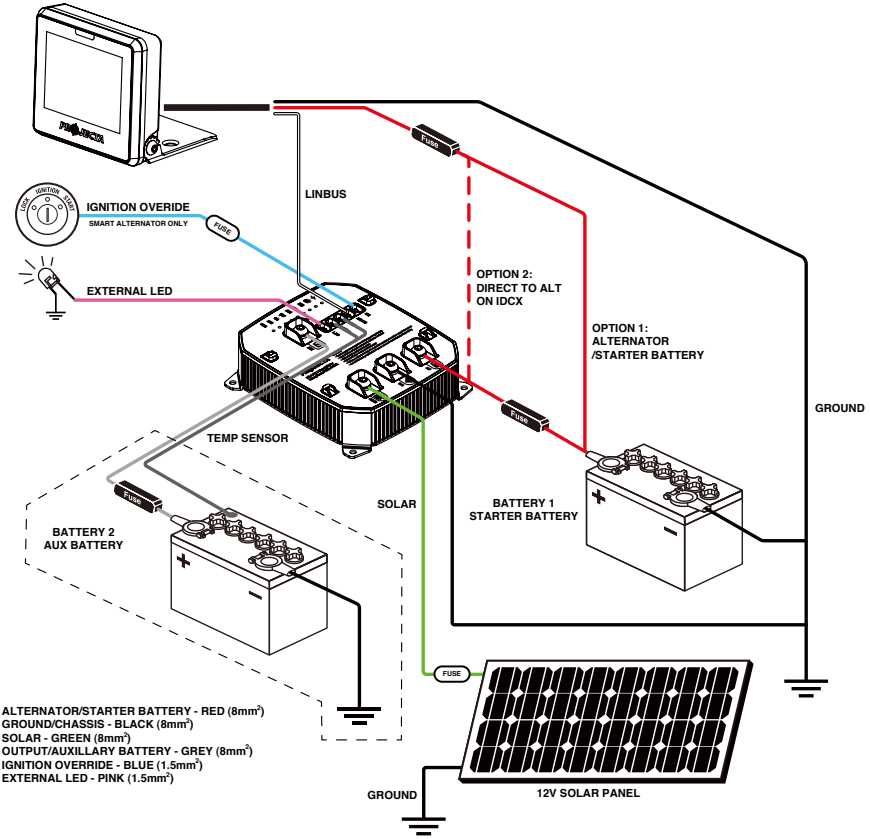

2. FULL SYSTEM CONFIGURATION

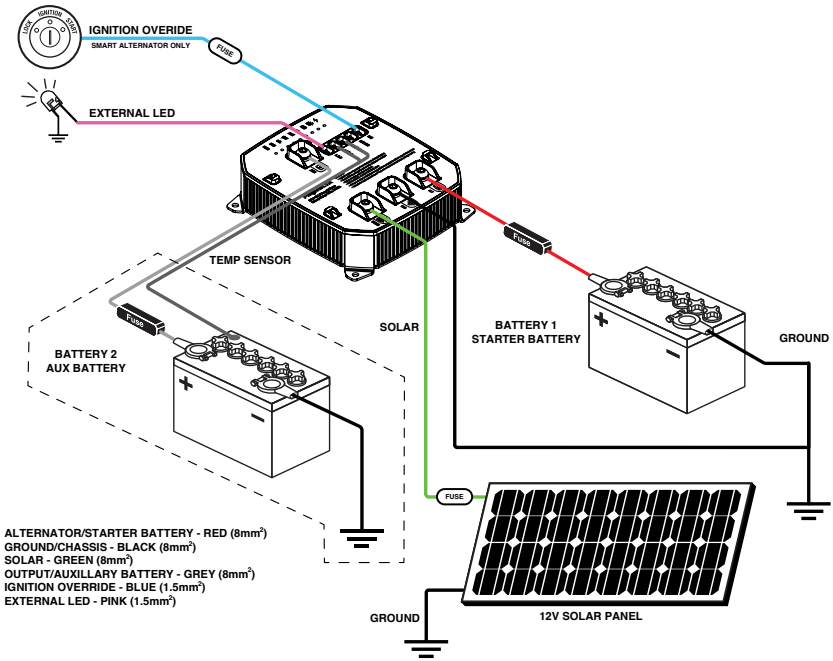

3. ALTERNATOR/STARTER INPUT ONLY CONFIGURATION

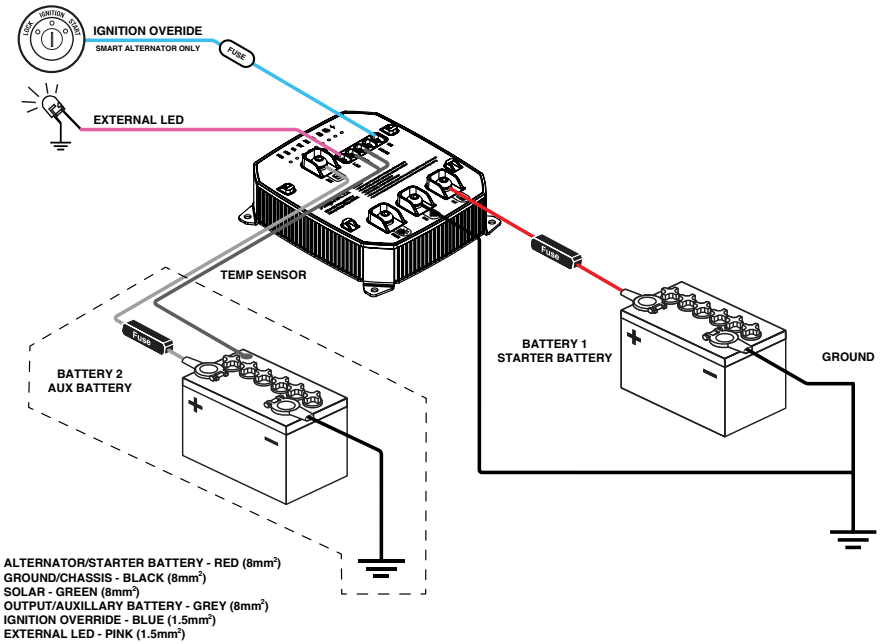

4. SOLAR & AUXILARY BATTERY INPUT CONFIGURATIO

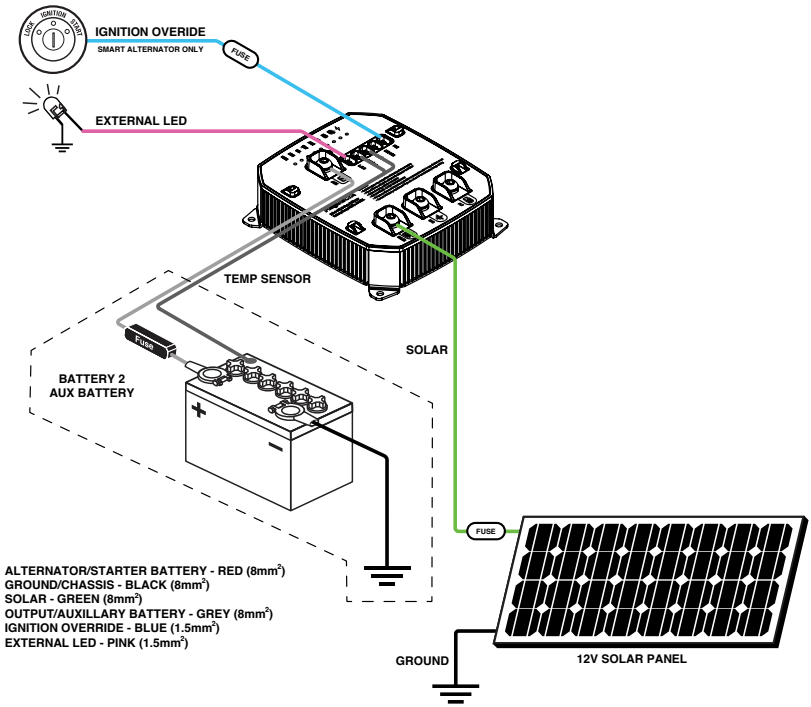

5. INTELI-IQ & TWIN IDC50X INSTALLATION

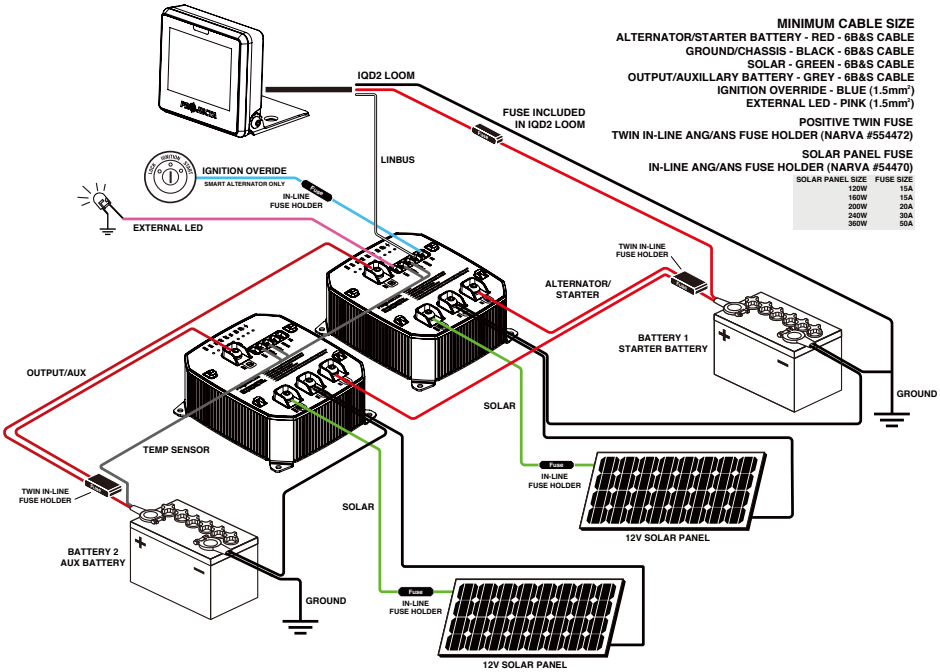

HOW TO READ LED INDICATORS

LED CHARGE INDICATORS

			DESCRIPTION
	Constant Green		Solar Present
		Constant Green	Alternator Present: Voltage within Range
		Flashing Green	Alternator Present: Voltage out of Optimal Range
Constant Red			IDCX Faulty
	Constant Red		Solar Input Reverse Polarity
		Constant Red	Alternator Input Reverse Polarity
	Flashing Red		Solar Overvoltage
		Flashing Red	Alternator Overvoltage
Flashing Green	Constant Green		Charging from Solar
Flashing Green		Constant Green	Charging from Alternator
Constant Green			Bulk Time Out
Flashing Amber	Flashing Amber	Flashing Amber	Over Temperature

LED BATTERY CHARGE STATUS INDICATORS

	SELECTED BATTERY CHEMISTRY LED	DESCRIPTION
Constant Red	FLASHING BLUE	Output Reverse Polarity
Flashing Red	FLASHING BLUE	Output Overvoltage
Constant Amber	FLASHING BLUE	Attempting to detect battery
Flashing Amber	CONSTANT BLUE	Soft-start Timeout
Flashing Green	CONSTANT BLUE	Bulk Charging
Flashing Green	FLASHING BLUE	Absorption Charging
Constant Green	FLASHING BLUE	Equalisation Charging
Constant Green	CONSTANT BLUE	Float Charging (Charging Complete or time out)
Constant Red	ALL BATTERY MODE LED'S FLASHING	Output Short Circuit

LED BEHAVIOR FOR PARALLEL CHARGING

When multiple IDCX units (up to 5) are connected for parallel charging:
One unit is designated as the Group Master, while the others become Group Slaves.

In Group Slave mode:
Only the Charging, ALT, and SOLAR LEDs are visible.
Battery profile LEDs are switched off to conserve power.

In Group Master mode:
All LEDs are visible, mirroring standalone behavior.
This distinction ensures users can easily monitor charging status and other parameters without ambiguity

HOW TO SELECT BATTERY CHEMISTY

IDCX allows you to select the select the appropriate charge setting for your auxiliary battery.

To change the battery type, hold and press the Mode Button ( ) for about 3 seconds. When the Charge LED turns OFF and the Battery Type LED will begin to flash, then release Mode button. After which, Mode Button ( ) can be short pressed to select the Battery Type. When the Battery Type LED is in the correct Battery Chemistry for about 3 seconds, then that Battery Type chemistry is deemed selected.

To confirm you have selected the correct battery chemistry, press the Mode button ( ).

OUTPUT OVERRIDE

If Auxiliary battery has been heavily discharged, hold and press the Mode button ( ) for about 10 seconds. When all Battery Type LEDS light up simultaneously, let go of the Mode Button. This will cause IDCX to commence charging.

INTELLI-RV COMPATIBLITY MODE

The IDCX can also be integrated with our PROJECTA INTELLI-RV power management system (P/N: PM210, PM310, PM410). To use IDCX with the Intelli-RV system, initially configure the IDCX by pressing the Mode ( ) button continuously 10 times or more within 10 seconds to enter Intelli-RV Compatibility Mode. User blue LED lights up together with the battery chemistry LED. Also, while in iRV mode, IDCX is not compatible with intelli IQ to allow parallel charging. Once set, this configuration does not need to be repeated for subsequent uses. To exit this mode, press the Mode ( ) button continuously 10 times or more within 10 seconds again.

ADAPTIVE CHARGING MODE:

Some new vehicles are installed with smart alternator which allows the engine to automatically stop when driver presses the brake and car stops. At this point, the Alternator voltage will drop and the power source of IDCX now comes from the starter battery. To reduce stress to the starter battery in this scenario, when enabled, Adaptive Charging mode reduces charging current corresponding to ALT input voltage level. Charging current starts to reduce at Alternator voltage of 13.4V, down to 0A at 12.9V. Charging current resumes back to full capacity when input voltage increases over 13.4V.

FREQUENTLY ASKED QUESTIONS

Q. Is IDCX waterproof?

A. The IDCX was designed and engineered to the stringent ingress protection rating of IP68 & IP69K. This allows the IDCX to meet the toughest of challenges whether that be river crossings, engine bay washing or direct high pressure washing of the unit.

Q. Why do the positive cables from the batteries need to be fused?

A. High-Capacity batteries can produce large amounts of power and are capable of melting cable insulation and catching fire in the case of a short circuit. Each positive (+) cable connected to the battery must be protected by a fuse located in close proximity to the battery.

Q. Is the IDCX safe to use with modern 'electronic' vehicles?

A. The IDCX has been designed to work with all vehicles, including new vehicles with EFI and computer management systems. The charger utilises sophisticated electronics that ensures complete safety for you and your vehicle.

Q. How do I know if the battery is charged?

A. Refer to diagram "LED BATTERY CHARGE STATUS INDICATORS" on page 13 to identify when the IDCX is indicating battery charging is complete.

Q. I have connected the IDCX properly but the power LED " ⚡ " does not come on?

A. Check the cable size. The IDCX is designed to power on and charge from an input source as little as 9V. If small size cables are used for wiring, the voltage might drop below 9V when IDCX is attempting to start up. Please refer to Installation – wiring section for recommended cable size.

Q. I have connected the IDCX to solar " ☀ " and alternator inputs " ⚙ ", but LEDs do not come on?

A. In some cases batteries can be discharged to the point where they have very little or no voltage. This can occur if a small amount of power is used for a long time, for example a map reading light is left on for a week or more. The IDCX is designed to charge an auxiliary battery from as little as 2 Volts. Refer to Page 13 Output Override for detailed instruction.

Q. Why is my IQD2 showing 'No Device Found' though all wires, including LIN, are connected properly?

A. IQD2 and IDCX may have malfunctioned. To resolve, remove and after about 1minute, reconnect ALL power wires (IQD2 loom, ALT, Solar Neg, and Aux) on IQD2 and IDCX.

Q. Why is my IQD2 showing 'No Device Found' though all wires, including LIN, are connected properly?

A. IQD2 and IDCX may have malfunctioned. To resolve, remove and after about 1minute, reconnect ALL power wires (IQD2 loom, ALT, Solar Neg, and Aux) on IQD2 and IDCX.

Q. How do I make my IDCX LED indicate the same battery chemistry compared to my IQD2 Mobile App?

A. Sometimes, when battery chemistry is changed by pressing the IDCX button, it does not reflect it to the Mobile App. To force the Mobile App to sync to IDCX, close IQD2 Mobile app then reconnect.

Q. Why is Battery not getting charged though solar input voltage is within range?

A. Solar input voltage is not an indicator of the Solar panel capability. Weather may be cloudy or solar panel is under the shade and the input current is not enough to commence charging.

Q. Why is LED flashing amber though my battery is connected?

A. While IDCX is in the process of recognizing (about 2minutes) the battery, LED is in amber state. It is also in the same color if battery is not present or battery voltage is very low. To regain charging a battery that is very deeply depleted, press and hold the IDCX button for about 10 seconds.

Q. Why does the IDCX indicate the battery is fully charged straight away?

A. There are three possible reasons why the IDCX indicated the battery is fully charged.
1. The battery is fully charged.
2. The battery has taken a surface charge.
3. The battery has a faulty cell.

Q. What is a "Surface Charge"?

A. Batteries unused or left discharged for some time build up a resistance to being recharged. When the charger is first connected, these batteries will take a surface charge, and the IDCX LED's will indicate the auxiliary battery is fully charged within a short period of time. The battery however is not fully charged. The charger is voltage sensitive and cannot differentiate between a surface charge and a fully charged battery. After a few hours, the battery may start to accept some charge but most batteries with this condition may not recover.

Q. What is a "Faulty Cell"?

A. 12 Volt batteries contain 6 cells, and one faulty cell is enough to ruin your battery. If after twelve hours of charging your battery is still accepting charge, you should test the cells using a hydrometer. If one reading is lower than the rest, it indicates a faulty cell. It is pointless to continue charging; the battery needs replacing.

Q. Why is there no output at the IDCX's auxiliary battery output "⚡"?

A. The IDCX incorporates short circuit protection that makes it much safer to use. For this reason, the IDCX will only output power when properly connected to a battery. To check if the IDCX is functioning, follow the instructions to connect and operate the charger as normal on a flat battery. While the battery is charging measure the battery voltage with a volt or multi-meter. Charging can be confirmed if the voltage is increasing (within the voltage parameters set out in the specifications).

WARRANTY STATEMENT

Brown & Watson International Pty. Ltd. ("BWI") of 1500 Ferntree Gully Road, Knoxfield, Vic., telephone (03) 9730 6000, fax (03) 9730 6050, warrants that all products described in its current catalogue will under normal use and service be free of failures in material and workmanship for a period of five (5) year from the date of the original purchase by the customer as marked on the invoice (see elsewhere for specific warranty period). This warranty does not cover ordinary wear and tear, abuse, alteration of products or damage caused by the purchaser.

To make a warranty claim the consumer must deliver the product at their cost to the original place of purchase or to any other place which may be nominated by either BWI or the retailer from where the product was bought in order that a warranty assessment may be performed. The consumer must also deliver the original invoice evidencing the date and place of purchase together with an explanation in writing as to the nature of the claim.

In the event that the claim is determined to be for a minor failure of the product then BWI reserves the right to repair or replace it at its discretion. In the event that a major failure is determined the consumer will be entitled to a replacement or a refund as well as compensation for any other reasonably foreseeable loss or damage.

This warranty is in addition to any other rights or remedies that the consumer may have under State or Federal legislation.

IMPORTANT NOTE

Our goods come with guarantees that cannot be excluded under the Australian Consumer Law. You are entitled to a replacement or refund for a major failure and compensation for any other reasonably foreseeable loss or damage. You are also entitled to have the goods repaired or replaced if the goods fail to be of acceptable quality and the failure does not amount to a major failure.

Distributed by

AUSTRALIA
Brown & Watson International Pty. Ltd.
Knoxfield Victoria 3180
Phone: (03) 9730 6000
Fax: (03) 9730 6050
National Toll Free: 1800 113 443

NEW ZEALAND OFFICE
Brown & Watson International NZ Ltd.
Mount Wellington, Auckland 1060
Phone: (09) 525 4575